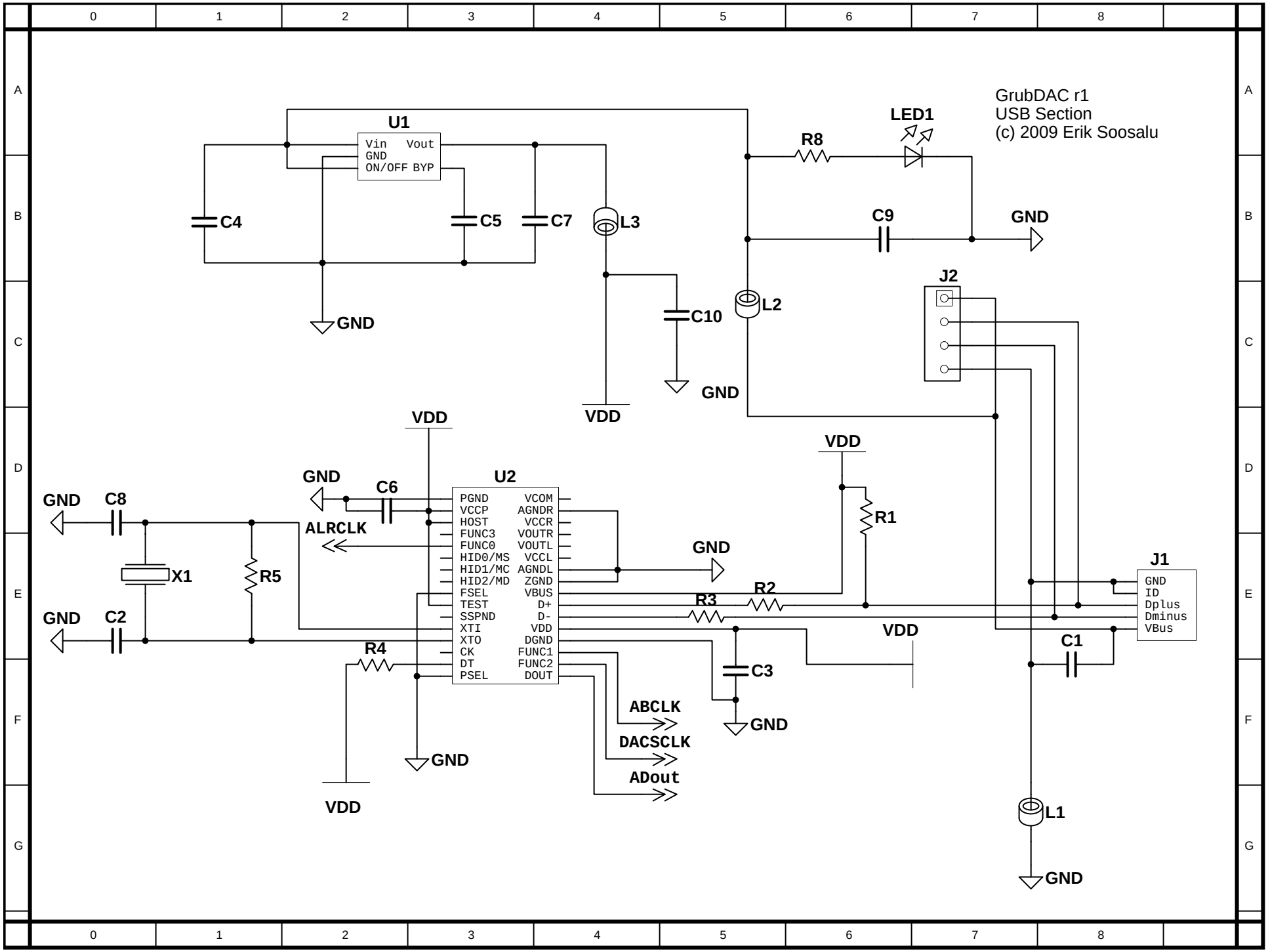
GrubDAC r1
USB Section
(c) 2009 Erik Soosalu
U1
Vin Vout
GND
ON/OFF BYP
C4
C5
C7
L3
C10
GND
VDD
R8
LED1
C9
GND
L2
J2
U2
PGND VCOM
VCCP AGNDR
HOST VCCR
FUNC3 VOUTR
FUNC0 VOUTL
HID0/MS VCCL
HID1/MC AGNDL
HID2/MD ZGND
FSEL VBUS
TEST D+
SSPND D-
XTI VDD
XTO DGND
CK FUNC1
DT FUNC2
PSEL DOUT
GND
C6
ALRCLK
GND
C8
X1
R5
GND
C2
R4
VDD
R1
R2
R3
C3
ABCLK
DACSCLK
ADout
J1
GND
ID
Dplus
Dminus
VBus
C1
L1
GND

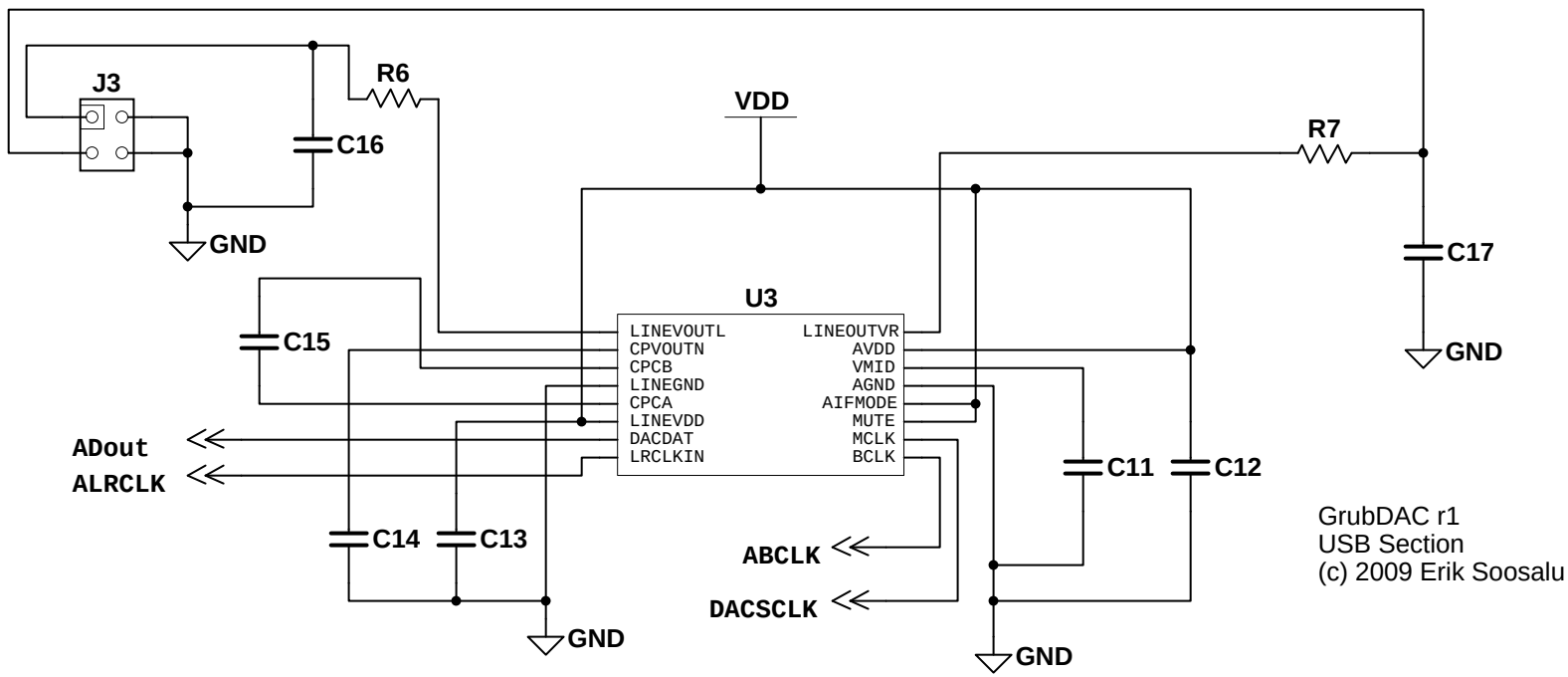

GrubDAC r1
USB Section
(c) 2009 Erik Soosalu